HIGH ACCURACY
measurement instruments

PRODUCT DATASHEET

www.high-accuracy.com

Product Data Sheet
PS-002121, Rev B
April 2018

Micro Motion® TA-Series Flow and Density Meters

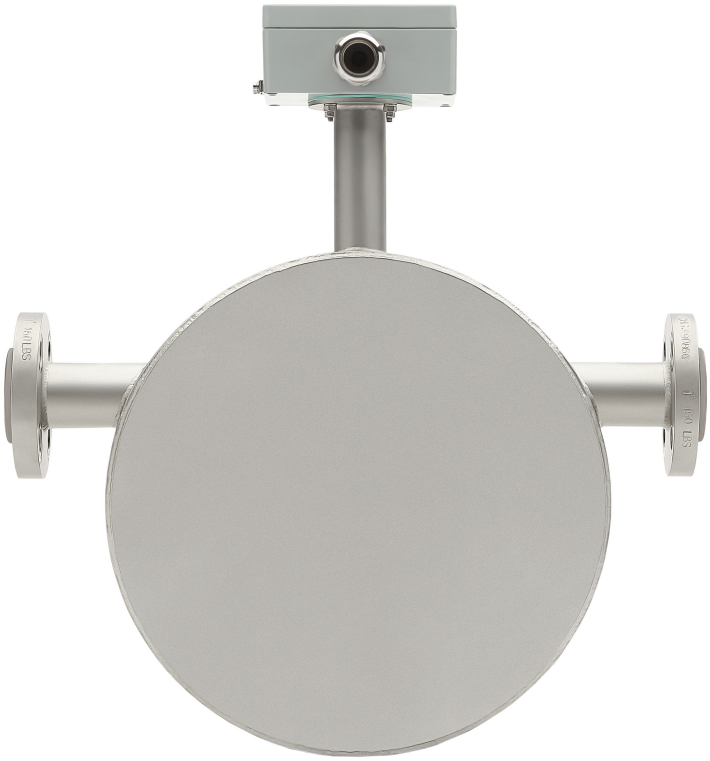

Best fit for application

- Remote transmitters available to match installation mounting requirements
- All wetted materials constructed from tantalum to handle corrosive applications such as acids

Exceptional reliability and safety

- Low operating frequency for robust measurement
- Reliable sensor design minimizes down time and process interruption costs

MICRO MOTION™

EMERSON™

Micro Motion TA-Series flow meters

Tantalum (TA) meters deliver superb measurement with exceptional flow and density performance as well as outstanding reliability in corrosive service environments.

Optimal flow and density fit for corrosive process control applications

- High performance rugged measurement in a compact design
- Low frequency, high sensitivity fit-and-forget meter provides robust measurements even under demanding process conditions
- Multiple line sizes provide an ideal platform for batching, distribution, allocation and intra-plant measurement applications

Industry-leading capabilities that unleash your process potential

- Available exclusively with the Model 5700 transmitter, with a wide range of input and output options, and an intuitive interface
- State of the art, ISO/IEC 17025 compliant calibration stands achieving ±0.014% uncertainty drive exceptional measurement accuracy
- True multi-variable technology measures necessary flow and density process variables simultaneously

Smart Meter Verification

Provides a quick, complete assessment of a Micro Motion Coriolis meter, determining whether the meter has been affected by erosion, corrosion, or other influences affecting meter calibration. No secondary references are required to perform this operation, and the meter can continue normal process measurement while the test is in progress.

Measurement principles

As a practical application of the Coriolis effect, the Coriolis mass flow meter operating principle involves inducing a vibration of the flow tube through which the fluid passes. The vibration, though it is not completely circular, provides the rotating reference frame which gives rise to the Coriolis effect. While specific methods vary according to the design of the flow meter, sensors monitor and analyze changes in frequency, phase shift, and amplitude of the vibrating flow tubes. The changes observed represent the mass flow rate and density of the fluid.

Mass flow measurement

The measuring tubes are forced to oscillate producing a sine wave. At zero flow, the two tubes vibrate in phase with each other. When flow is introduced, the Coriolis forces cause the tubes to twist resulting in a phase shift. The time difference between the waves is measured and is directly proportional to the mass flow rate.

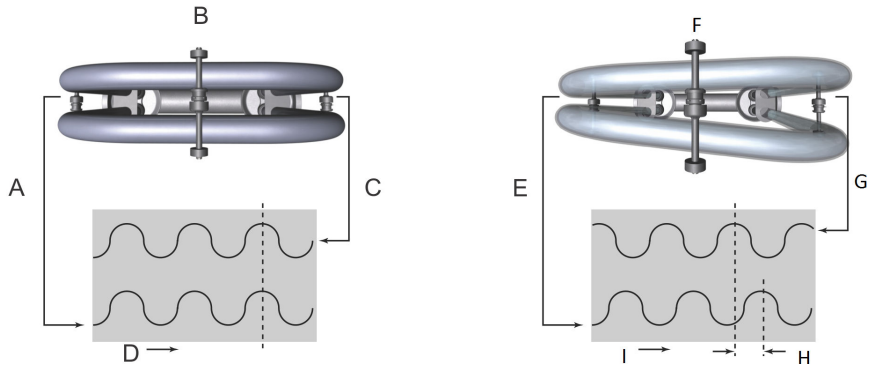

A. Inlet pickoff displacement
B. No flow
C. Outlet pickoff displacement
D. Time
E. Inlet pickoff displacement
F. With flow
G. Outlet pickoff displacement
H. Time difference
I. Time

Temperature measurement

Temperature is a measured variable that is available as an output. The temperature is also used internal to the sensor to compensate for temperature influences on Young's Modulus of Elasticity.

Meter characteristics

- Measurement accuracy is a function of fluid mass flow rate independent of operating temperature, pressure, or composition. However, pressure drop through the sensor is dependent upon operating temperature, pressure, and fluid composition.
- Specifications and capabilities vary by model and certain models may have fewer available options. Please refer to the Online Store Sizing and Selection Tool at the Emerson web site (*www.micromotion.com/onlinestore*) for detailed information regarding performance and capabilities.

Performance specifications

Reference operating conditions

For determining the performance capabilities of our meters, the following conditions were used as a basis:

- Water at 68 to 77 °F and 14.5 to 29 psig (20 to 25 °C and 1 to 2 barg)
- Gas mass flow rates on hydrogen chloride (HCI) with molecular weight of 36.5 at 68 °F (20 °C) and 100 psig (6.9 barg)
- Accuracy based on industry leading accredited calibration stands according to ISO 17025/IEC 17025
- All models have a density range up to 2 g/cm^3 (2000 kg/m^3)

Accuracy and repeatability

Accuracy and repeatability on liquids and slurries

Performance specification	All models
Mass flow accuracy(1)	±0.10% of rate ±z.s.
Volume flow accuracy(1) Volume flow accuracy is a combination of mass flow and density accuracy.	±0.10% of rate ±z.s.
Mass flow repeatability(2)	±0.05% ± [½ (zero stability / flow rate) × 100] % of rate
Volume flow repeatability(2)	±0.05% ± [½ (zero stability / flow rate) × 100] % of rate
Density accuracy	±0.001 g/cc
Density repeatability	±0.0005 g/cc
Temperature accuracy	±1.5 °C ±0.5% of reading
Temperature repeatability	±1.5 °C

(1) Accuracy = +/-0.10% +/- (zero stability/flow rate) x 100%

(2) Repeatability = ±0.05% ± [½ (zero stability / flow rate) × 100]% of rate

Accuracy and repeatability on gases

Performance specification	All models
Mass flow accuracy(1)	±1.0% of rate ±z.s.
Mass flow repeatability(2)	±0.5% of rate ±z.s.

(1) Accuracy = Accuracy = ±1.00% ± (zero stability / flow rate) x 100%

(2) Repeatability = ±0.50% ± [½ (zero stability / flow rate) × 100] % of rate

Liquid flow rates

Nominal flow rate

Micro Motion has adopted the term nominal flow rate, which is the flow rate at which water at reference conditions causes approximately 14.5 psig (1 barg) of pressure drop across the meter.

Mass flow rates for all models

	Nominal line size		Nominal flow rate		Maximum flow rate	
Model	inch	mm	lb/min	kg/h	lb/min	kg/h
TA010T	1/10	2.5	11.9	325	12.9	350
TA025T	1/4	6	41.5	1130	44.1	1200
TA050T	1/2	13	110.2(1)	3000(1)	110.2	3000
TA075T	3/4	19	191.1	5200	220.5	6000
TA100T	1	25	503.4	13700	661.4	18000

Model	Nominal line size		Nominal flow rate		Maximum flow rate	
	inch	mm	lb/min	kg/h	lb/min	kg/h
TA200T	2	50	1102.3	30000	1102.3	30000

(1) .57 barg

Volume flow rates for all models

Model	Nominal flow rate			Maximum flow rate		
	gal/min	barrels/h	l/h	gal/min	barrels/h	l/h
TA010T	1.4	2	325	1.5	2.1	350
TA025T	5	6.8	1130	5.3	7.2	1200
TA050T	13.2(1)	18(1)	3000(1)	13.2	18	3000
TA075T	22.9	31.2	5200	26.5	36	6000
TA100T	60.4	82.2	13700	79.4	108	18000
TA200T	132.3	180	30000	132.3	180	30000

(1) .57 barg

Gas flow rates

When selecting sensors for gas applications, pressure drop through the sensor is dependent upon operating temperature, pressure, and fluid composition. Therefore, when selecting a sensor for any particular gas application, it is highly recommended that each sensor be sized using the Online Store Sizing and Selection Tool at *www.micromotion.com/onlinestore*.
The following values are typical nominal flow rates by line size. Please use the sizing tool for specific sizing information.

Model	Mass		Volume	
	lb/min	kg/h	SCFM	Nm^3 /h
TA010T	2	32	21	21
TA025T	4	88	42	58
TA050T	10	270	105	177
TA075T	13	334	137	219
TA100T	32	870	336	570
TA200T	61	1650	640	1080

Note
Standard (SCFM) reference conditions for HCl with molecular weight of 36.5 are 14.7 psia (1 bara) and 68 °F (20 °C).

Zero stability for all models

Zero stability is used when the flow rate approaches the low end of the flow range where the meter accuracy begins to deviate from the stated accuracy rating, as depicted in the turndown section below. When operating at flow rates where meter accuracy begins to deviate from the stated accuracy rating, accuracy is governed by the formula: accuracy = (zero stability/flow rate) x 100%. Repeatability is similarly affected by low flow conditions.

Model	Zero stability	
	lb/min	kg/h
TA010T	0.001	0.035
TA025T	0.004	0.12
TA050T	0.011	0.3
TA075T	0.022	0.6
TA100T	0.066	1.8
TA200T	0.110	3

Process pressure ratings

Sensor maximum working pressure reflects the highest possible pressure rating for a given sensor. Process connection type and environmental and process fluid temperatures may reduce the maximum rating.

All sensors comply with Council Directive 2014/68/EU on pressure equipment.

Sensor hydrostatic test to 1.5 times the rated pressure

Model	psig	barg
TA010T	2245	155
TA025T	1142	79
TA050T	852	59
TA075T	1432	99
TA100T	920	63
TA200T	687	47

Operating conditions: Environmental

Vibration limits

Meets IEC 60068-2-6, endurance sweep, 1 to 150 Hz, 20 sweep cycles at 1.0 g.

Temperature limits

Temperature type	Min	Max
Process temperature	-40 ˚F (-40 ˚C)	356 ˚F (180 ˚C)
Ambient temperature	-40 ˚F (-40 ˚C)	176 ˚F (80 ˚C)

Use the extended mount junction box (electronic interface code H) for process temperatures above 176 ˚F (80 ˚C).

Operating conditions: Process

Process temperature effect

- For mass flow measurement, process temperature effect is defined as the change in sensor flow accuracy due to process temperature change away from the calibration temperature. Temperature effect can be corrected by zeroing at the process conditions.
- For density measurement, process temperature effect is defined as the change in sensor density accuracy due to process temperature change away from the calibration density. See the *Micro Motion TA-Series Flow and Density Meters Installation Guide* for proper setup and configuration.

Model code	Mass flow rate (% of maximum rate) per °C	Density	
		g/cm^3 per °C	kg/m^3 per °C
TA010T - TA200T	±0.00175	±0.0001	±0.1

Note

Operating at pressures significantly above calibration pressure may also impact measurement performance. Contact the factory with questions.

Pressure relief

Tantalum-series sensors are available with a rupture disk installed on one of the purge fittings located on the case. Rupture disks are meant to vent process fluid from the sensor case in the unlikely event of a flow tube breach. Some users connect a pipeline to the rupture disk to help contain escaping process fluid. For more information about rupture disks, contact customer service.

If the sensor has a rupture disk, it should remain installed at all times as it would otherwise be necessary to re-purge the case. If a rupture disk is activated by a tube breach, the seal in the rupture disk will be broken, and the Coriolis meter should be removed from service.

The rupture disk is located as follows on the meter, and the warning sticker shown is placed next to it.

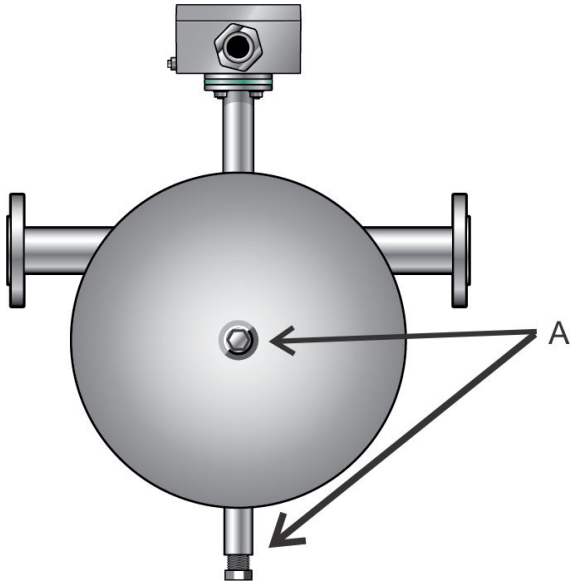

A. Purge fittings

⚠ DANGER!

Stay clear of the rupture disk pressure relief area. High-pressure fluid escaping from the sensor can cause severe injury or death. The sensor must be oriented so that personnel and equipment will not be exposed to any discharge along the pressure relief path.

Hazardous area classifications

Approvals and certifications

Type	Approval or certification (typical)	
CSA and CSA C-US	Ambient temperature: –40 to +176 °F (–40 to +80 °C) Class 1, Div 1, Groups A, B, C, and D Class I, Div. 2, Groups A, B, C, and D	
ATEX	CE 2460 Ex	II 2G Ex ia IIC TX Gb
IECEx	Ex ia IIC TX Gb	
EMC effects	Complies with EMC directive 2014/30/EU per EN 61326 Industrial	
	Complies with NAMUR NE-21 (22.08.2007)	

Note

When a meter is ordered with hazardous area approvals, detailed information is shipped along with the product.

Transmitter interface

A Micro Motion flowmeter system provides a wide range of output capabilities and advanced diagnostics that are tailor-fit to specific applications.

The Model 5700 transmitter is required for all TA-Series meters, which are available with a wide variety of field mount options to accomodate harsh conditions.

TA-Series meters are available with an expansive selection of input and output connectivity options including the following:

- 4-20 mA
- Modbus/USP
- Modbus/RS-485, HART/RS-485
- HART/Bell 202
- FOUNDATION™ fieldbus
- EtherNet/IP/Ethernet
- Modbus TCP/Ethernet
- PROFINET/Ethernet

Physical specifications

Materials of construction

General corrosion guidelines do not account for cyclical stress, and therefore should not be relied upon when choosing a wetted material for a Micro Motion meter. Refer to the *Micro Motion Corrosion Guide* for material compatibility information.

For the Model 5700 transmitter specifications, see the *Model 5700 Transmitters Product Data Sheet*.

Wetted part materials

All wetted materials are pure tantalum.

Model	Sensor weight	
	lb	kg
TA010T	11.0	5
TA025T	26.5	12
TA050T	33.1	15
TA075T	33.1	15
TA100T	52.9	24
TA200T	88.2	40

Note
Weight specifications are based upon the ASME B16.5 CL150 flange and do not include electronics.

Non-wetted part materials

Component	Enclosure rating	304 stainless steel	Polyurethane-painted aluminum
Sensor housing	—	✓	
Junction box housing	NEMA 4X (IP66)		✓
Model 5700 transmitter housing	NEMA 4X (IP66)		✓

Flanges

Sensor type	Flange types
All sensor models	■ ASME B16.5 SM3 (up to CL300) ■ EN 1092-1 Form B2 (up to PN40)

Note
For flange compatibility, please refer to the Online Store Sizing and Selection Tool at *www.micromotion.com/onlinestore*.

Dimensions

These dimensional drawings are intended to provide a basic guideline for sizing and planning. They are representative of a sensor fitted with a junction box meant for a remote mount transmitter.

All dimensions in tables are ±1/8 inch (±3 mm)

Example dimensions for models TA010T to TA200T with a standard welded body

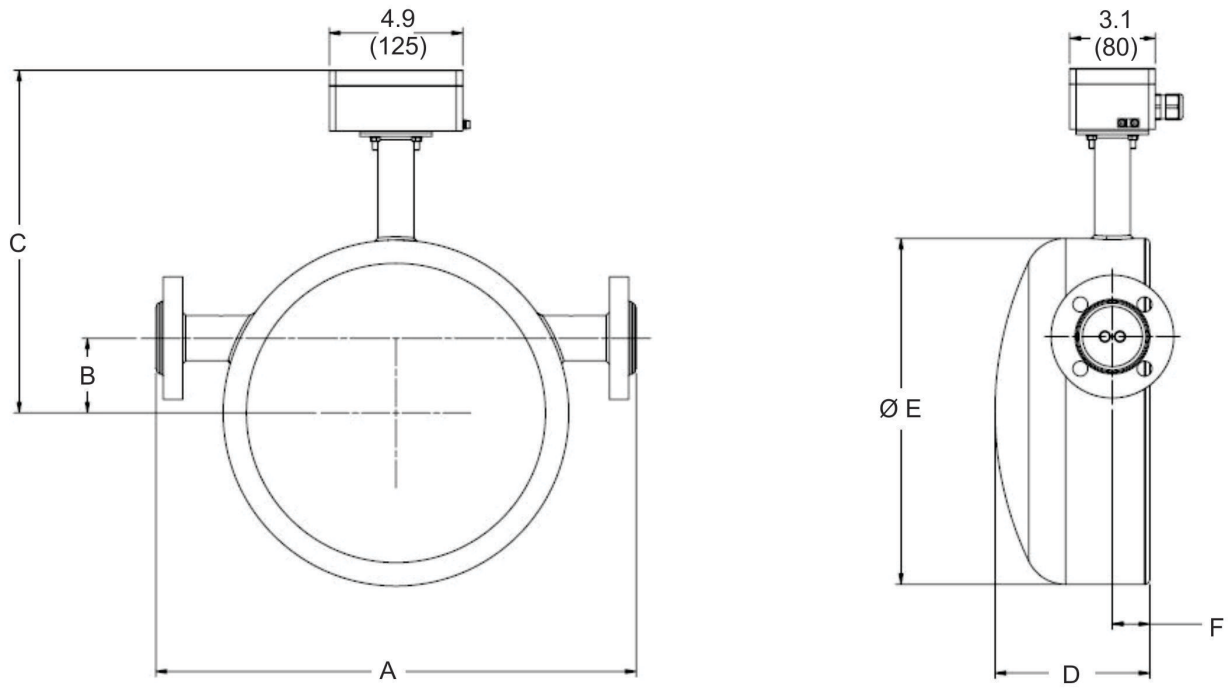

Note

Junction box dimensions are in inches (mm)

Model	Dim A		Dim B		Dim C[1]		Dim D		Dim E		Dim F	
	inch	mm	inch	mm	inch	mm	inch	mm	inch	mm	inch	mm
TA010T	13.8	350	0.8	20	9.8 (13.8)	249 (351)	3.7	95	8.6	219	1.1	28
TA025T	15.7	400	0.8	20	9.8 (13.8)	249 (351)	3.7	95	8.6	219	1.1	28
TA050T	17.7	450	2.7	69	9.9 (13.9)	251 (353)	5.7	145	12.8	324	1.4	35
TA075T	17.7	450	2.8	70	12.6 (16.7)	321 (423)	5.7	145	12.8	324	1.4	35
TA100T	25.6	650	3.0	75	14.3 (18.3)	362 (464)	9.1	230	16.0	406	3.1	80

Model	Dim A		Dim B		Dim C(1)		Dim D		Dim E		Dim F	
	inch	mm	inch	mm	inch	mm	inch	mm	inch	mm	inch	mm
TA200T	29.5	750	3.0	75	16.3 (20.3)	413 (515)	13.0	330	20.0	508	4.7	120

(1) Measurement in parenthesis is for the extended mount option.

Ordering information

Base model

Code descriptions

Model	Size and material
TA010T	1/10-inch (2.5 mm) (DN2), tantalum
TA025T	1/4-inch (6 mm) (DN6), tantalum
TA050T	1/2-inch (13 mm) (DN15), tantalum
TA075T	3/4-inch (19 mm) (DN20), tantalum
TA100T	1-inch (25 mm) (DN25), tantalum
TA200T	2-inch (50 mm) (DN50), tantalum

Process connections

Models TA010T and TA025T

Code	Description					
D15	DN15	PN40	EN 1092-1	EN.1.4404	Socket weld flange	Form B2
D17	3/4-inch (19 mm)	CL150	ASME B16.5-2003	EN.1.4404	Socket weld flange	SM3
D18	3/4-inch (19 mm)	CL300	ASME B16.5-2003	EN.1.4404	Socket weld flange	SM3

Models TA050T and TA075T

Code	Description					
D25	DN25	PN40	EN 1092-1	EN.1.4404	Socket weld flange	Form B2
D27	1-inch (25 mm)	CL150	ASME B16.5-2003	EN.1.4404	Socket weld flange	SM3

Code	Description					
D28	1-inch (25 mm)	CL300	ASME B16.5-2003	EN.1.4404	Socket weld flange	SM3

Model TA100T

Code	Description					
D50	DN50	PN40	EN 1092-1	EN.1.4404	Socket weld flange	Form B2
D52	2-inch (50 mm)	CL150	ASME B16.5	EN.1.4404	Socket weld flange	SM3
D53	2-inch (50 mm)	CL300	ASME B16.5	EN.1.4404	Socket weld flange	SM3

Model TA200T

Code	Description					
D80	DN80	PN40	EN 1092-1	EN.1.4404	Socket weld flange	Form B2
D82	3-inch (80 mm)	CL150	ASME B16.5	EN.1.4404	Socket weld flange	SM3

Case options

Case options for all models

Code	Case option
N	Standard case (300-Series stainless steel)
P	Standard case (300-Series stainless steel) with purge fittings (1/2 inch NPT female)
G	Standard case (300-Series stainless steel) with purge fittings (G1/2 female)
D	Standard case (300-Series stainless steel) with rupture disk (one 1/2 inch NPT male)

Electronics interface (available on all models)

Code	Electronics interface	Temperature service rating
R	9-wire polyutherane-painted aluminum box	-40 °F to 212 °F (-40 °C to 100 °C)
H	9-wire extended mount polyutherane-painted aluminum box	-40 °F to 356 °F (-40 °C to 180 °C)

Conduit connections (available on all models)

Code	Description
A	No gland
H	Brass nickel cable gland

Code	Description
J	Stainless steel cable gland

Approvals (available on all models)

Code	Description
M	Micro Motion Standard (no approval, without CE/EAC markings)
N	Micro Motion Standard / PED compliant (with CE/EAC markings)
A	CSA (US and Canada): Class I, Division 1, Groups C, and D
Z	ATEX - Equipment Category 2 (Zone 1)
I	IECEx Zone 1

Future option 1

Code	Future option 1
Z	Reserved for future use

Future option 2

Code	Future option 2
Z	Reserved for future use

Calibration (available on all models)

Code	Calibration option
Z	0.10% +/- mass flow and 0.001 g/cc density calibration (±0.1% +/- volume flow)

Measurement application software (all models)

Code	Measurement application software option
Z	No measurement application software

Factory options

Code	Factory option
Z	Standard product

Certificate, tests, calibrations and services (all optional)

Code	Material quality examination tests and certificates
MC	Material Inspection Certificate 3.1 (Supplier Lot Traceability per EN 10204) Available on all models

Code	Pressure testing
HT	Hydrostatic Test Certificate 3.1 Available on all models

Code	Dye penetrant examination
D1	Dye Penetrant Test Package 3.1 (sensor only; Liquid Dye Penetration NDE Qualification) Available on all models except TA010T

Code	Positive material testing
PM	Positive Material Test Certificate 3.1 (without carbon content) Available on all models

Code	Sensor completion options
SP	Special packaging Available on all models

HIGH ACCURACY
measurement instruments

Our offering:

	Pressure Measurement		Level Measurement
	Temperature Measurement		Flow Measurement
	Marine Measurement & Analytical		Gas Analysis
	Liquid Analysis		Flame and Gas Detection
	Tank Gauging		Wireless Infrastructure
	Acoustic & Discrete	HIGH ACCURACY measurement instruments	

www.high-accuracy.com

Emerson Automation Solutions
Worldwide Headquarters
7070 Winchester Circle
Boulder, Colorado USA 80301
T: +1 800-522-6277
T: +1 303-527-5200
F: +1 303-530-8459
Mexico: 52 55 5809 5300
Argentina: 54 11 4837 7000
Brazil: 55 15 3413 8147
Chile: 56 2 2928 4800

Emerson Automation Solutions
Central Europe: +41 41 7686 111
Eastern Europe: +41 41 7686 111
Dubai: +971 4 811 8100
Abu Dhabi: +971 2 697 2000
France: 0800 917 901
Germany: +49 (0) 2173 3348 0
Italy: 8008 77334
The Netherlands: +31 (0) 70 413 6666
Belgium: +32 2 716 77 11
Spain: +34 913 586 000
U.K.: 0870 240 1978
Russian/CIS: +7 495 981 9811

Emerson Automation Solutions
Australia: (61) 3 9721 0200
China: (86) 21 2892 9000
India: (91) 22 6662 0566
Japan: (81) 3 5769 6803
South Korea: (82) 31 8034 0000
Singapore: (65) 6 363 7766

©2018 Micro Motion, Inc. All rights reserved.

The Emerson logo is a trademark and service mark of Emerson Electric Co. Micro Motion, ELITE, ProLink, MVD and MVD Direct Connect marks are marks of one of the Emerson Automation Solutions family of companies. All other marks are property of their respective owners.

MICRO MOTION

EMERSON